PRESSURE SWITCHES

PS40

INTERNAL STRUCTURE (M5 female screw)

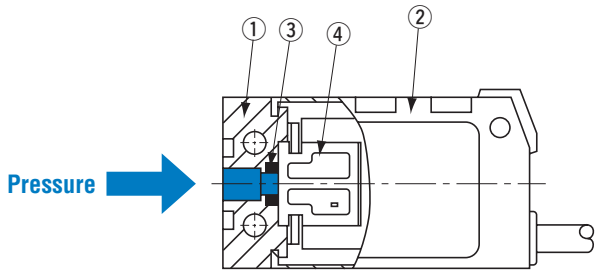

	Part name	Material
①	Pressure port	POM (Polyoxymethylene)
②	Housing	PC (Polycarbonate)
③	"O" ring	Fluoro-rubber
④	Port block	LCP (Liquid crystal polymer)

FEATURES

- Compatible with non-corrosive gases
- Solidstate pressure switch with no mechanical moving parts
- 2 types of pressure ports are available
- Open collector output of either NPN or PNP is available
- Analog output type available

MODEL NUMBER DESIGNATION

P S 4 0 - 1 0 2 G - N A R

Series name

Rated pressure range
501 : 0 ~ 50 kPa
102 : 0 ~ 100 kPa
103 : 0 ~ 1000 kPa

Pressure reference
G : Gauge
V : Gauge (Vacuum)

Switch output interface
N : NPN open collector
P : PNP open collector

Outputs
A : 1 switch output with adjustable hysteresis and analog output
W : 2 switch output

Pressure port
R : R 1/8 male screw
M : M 5 female screw

LIST OF MODEL NUMBERS

Pressure port	Outputs	Switch output	102V	501G	102G	103G
			–100 kPa	50 kPa	100 kPa	1000 kPa
R 1/8 male screw	Adjustable hysteresis switch output + Analog output	NPN open collector output	PS40-102V-NAR	PS40-501G-NAR	PS40-102G-NAR	PS40-103G-NAR
		PNP open collector output	PS40-102V-PAR		PS40-102G-PAR	PS40-103G-PAR
	2 points switch output	NPN open collector output	PS40-102V-NWR	PS40-501G-NWR	PS40-102G-NWR	PS40-103G-NWR
		PNP open collector output	PS40-102V-PWR		PS40-102G-PWR	PS40-103G-PWR
M 5 female screw	Adjustable hysteresis switch output + Analog output	NPN open collector output	PS40-102V-NAM	PS40-501G-NAM	PS40-102G-NAM	PS40-103G-NAM
		PNP open collector output	PS40-102V-PAM		PS40-102G-PAM	PS40-103G-PAM
	2 points switch output	NPN open collector output	PS40-102V-NWM	PS40-501G-NWM	PS40-102G-NWM	PS40-103G-NWM
		PNP open collector output	PS40-102V-PWM		PS40-102G-PWM	PS40-103G-PWM

⧄ : Not available
❋ Verify the above model numbers when placing orders.

■ Specifications are subject to change without notice. Specifications in this catalog are for reference. The formal specification sheets will be submitted upon request.

Nov., 2009

STANDARD SPECIFICATIONS

● Unless otherwise specified, the specs are defined at an ambient temperature of 25±5 °C and excitation voltage of 12 V DC.

	Item / Model number		102V	501G	102G	103G
General specifications	Pressure reference		Gauge			
	Rated pressure range	kPa	– 100	50	100	1000
	Maximum pressure	kPa	200	100	200	1500
	Break-down pressure	kPa	500	250	500	2000
	Operating temp. range	°C	– 20 ~ 70			
	Compensated temp. range	°C	0 ~ 50			
	Operating humidity	%RH	35 ~ 85 (No condensation)			
	Storage temp.	°C	– 20 ~ 80			
	Pressure medium		Non-corrosive gases			
	Insulation resistance	MΩ minimum	100 (500 V DC)			
	Dielectric strength		500 V AC, 60 s (Leakage current 1 mA maximum)			
	Pressure port		R 1/8 (Female screw) or "O" ring groove (Female screw)			
	Net weight	g	Approx. 50			
Power	Supply voltage	V DC	10.8 ~ 30 V (Including ripple percentage)			
	Consumption current	maximum	17 mA (Only W type 25 mA maximum)			
Switch output	No. of outputs		1 or 2			
	Output interface		Open collector output (NPN or PNP)			
	Setting method		Adjustable by VR			
	Adjustable range		Zero through rated pressure minimum			
	Display		Red LED ON (W type only : SW1 Red, SW2 Green)			
	Accuracy 0 ~ 50 °C (Reference temp.: 25 °C)	% F.S.	± 3			
	Hysteresis		Approx. 1 ~ 15 % of the set value (W type only 2 % F.S. maximum)			
	Switching capacity		30 V 80 mA			
	Residual voltage	V maximum	0.8 (NPN), 1.2 (PNP)			
	応答速度 Response	ms	Approx. 1			
Analog output	Output voltage	V	1 ~ 5			
	Zero voltage	V	1 ± 0.1			
	Span voltage	V	4 ± 0.1			
	Output current	mA maximum	1 (Load resistance 5 kΩ minimum)			

■ENVIRONMENTAL CHARACTERISTICS

Test item	Test conditions (At 25 ± 5 °C)	Permissible change
Vibration	10 ~ 500 Hz, 1.5 mm maximum/98.1 m/s², 3 directions for 2 hours each	Switch output setting and analog output (Zero voltage/span voltage): ± 2 %F.S. maximum, each
Shock	490 m/s², 3 directions for 3 times each	
Pressure cycling	0~Rated pressure, 10^6 cycles	
Moisture resistance	40 °C, 90 ~ 95 %RH, 240 hrs.	

■OUTLINE DIMENSIONS

Unless otherwise specified, tolerance : ± 0.5 (Unit: mm)

● NAR, PAR, NWR, PWR

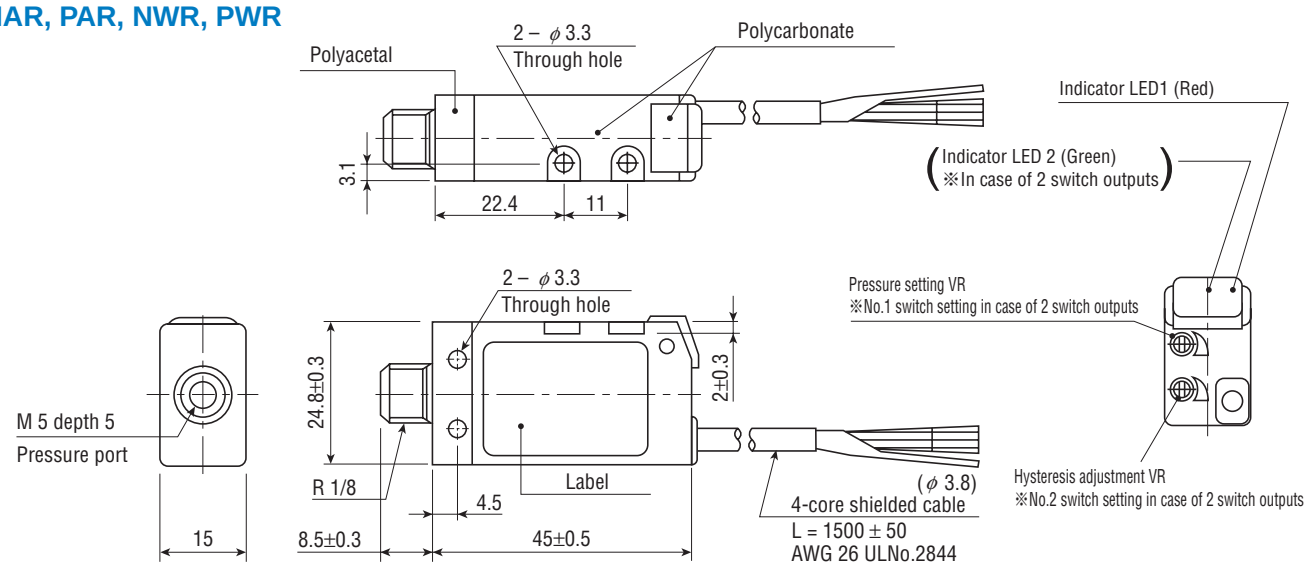

● NAM, PAM, NWM, PWM

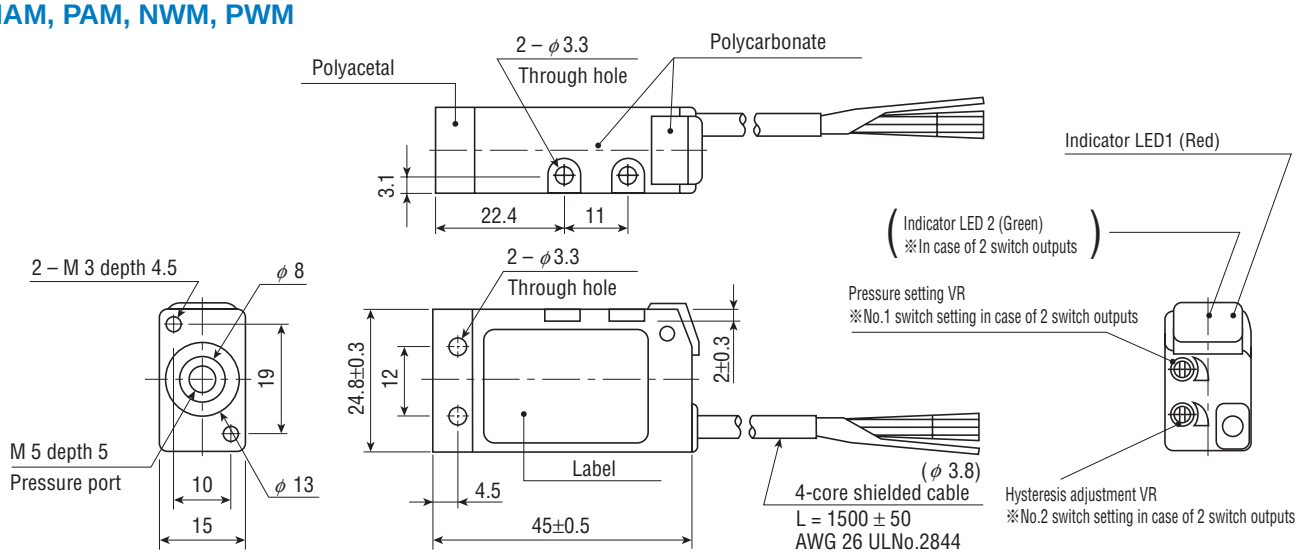

PS40 (NAM, NAR, PAM, PAR)

Wire color	Connection
Brown	Power ⊕
Black	Switch output
White	Analog output
Blue	Common
Shield	N.C.

PS40 (NWM, NWR, PWM, PWR)

Wire color	Connection
Brown	Power ⊕
Black	Switch output 1
White	Switch output 2
Blue	Common
Shield	N.C.

■INTERNAL ELECTRICAL SCHEMATICS

● NAM, NAR (NPN)

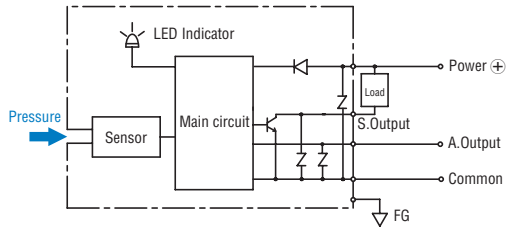

● PAM, PAR (PNP)

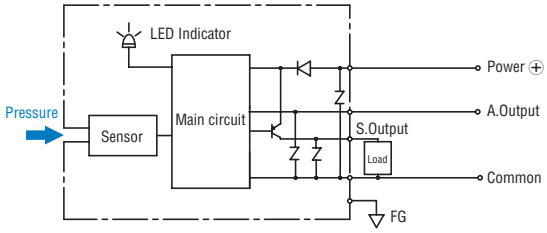

● NWM, NWR (NPN)

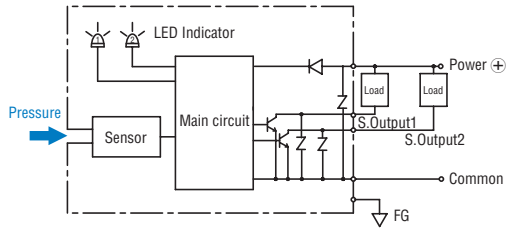

● PWM, PWR (PNP)

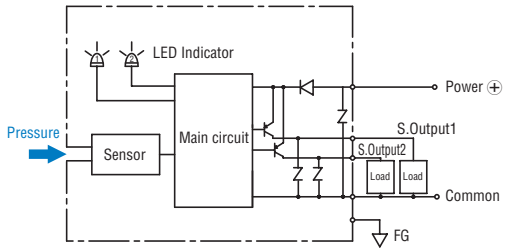

■SWITCH OUTPUT SCHEMATICS

● PS40-102V

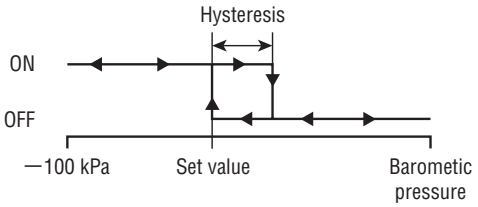

● PS40-＊＊＊G

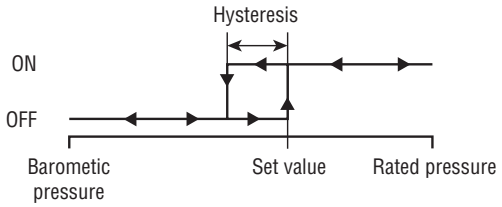

※ ＊A＊ is adjustable hysteresis type.