EX800-SERIES
Insertion Electromagnetic Flow Sensor

ISO 9001:2008 CERTIFIED COMPANY

APPLICATIONS

- Conductive fluids
- Small pipe applications (1”-12”)
- Industrial processes
- Chemical metering pumps
- Fertigation

FEATURES

- No moving parts
- Economical
- Durable
- Easy to install
- Easy to maintain

GENERAL INFORMATION

EX800-Series insertion electromagnetic flowmeters are designed for use with conductive liquids in 1 to 12” pipe. A choice of materials (stainless steel, brass, and PVC) allows the meter to adapt to a range of temperature, pressure, and corrosive environments.

The EX800 is highly suitable for difficult applications with changing viscosities and pulsating flows, such as air-driven diaphragm pumps. With no moving parts, these meters can be used in “dirty water” applications where debris would foul a mechanical meter. Like all magmeters, when used in chemical injection applications, these meters should be installed upstream of the chemical line (or far enough downstream to allow complete mixing of fluids before the meter).

Designed for modularity and versatility, the EX800-Series has a current-sinking pulse output that can be combined with the appropriate transmitter or indicator for the application. For basic rate/total and pulse output, the FT430 is best. For analog output and display of rate and total, the FT440 can be used. Blind analog output is provided by the AO55. The PD10 can be used to divide the pulse for pacing chemical metering pumps. Electronic modules can be wall- or meter- mounted. If the EX800 meter is used with a programmable controller, the output signal can be fed direct, with no other conditioning required.

EX800-Series fixed depth insertion meters require special fittings. Factory installation in the fitting ensures correct depth placement in the pipe. The EX800-Series meter can be ordered in a full power model when a source of electricity is available, or in a low power model that can run on an external battery with solar panel.

Reverse flow output and immersibility are optional.

EX800-SERIES
Insertion Electromagnetic Flow Sensor

FEATURES

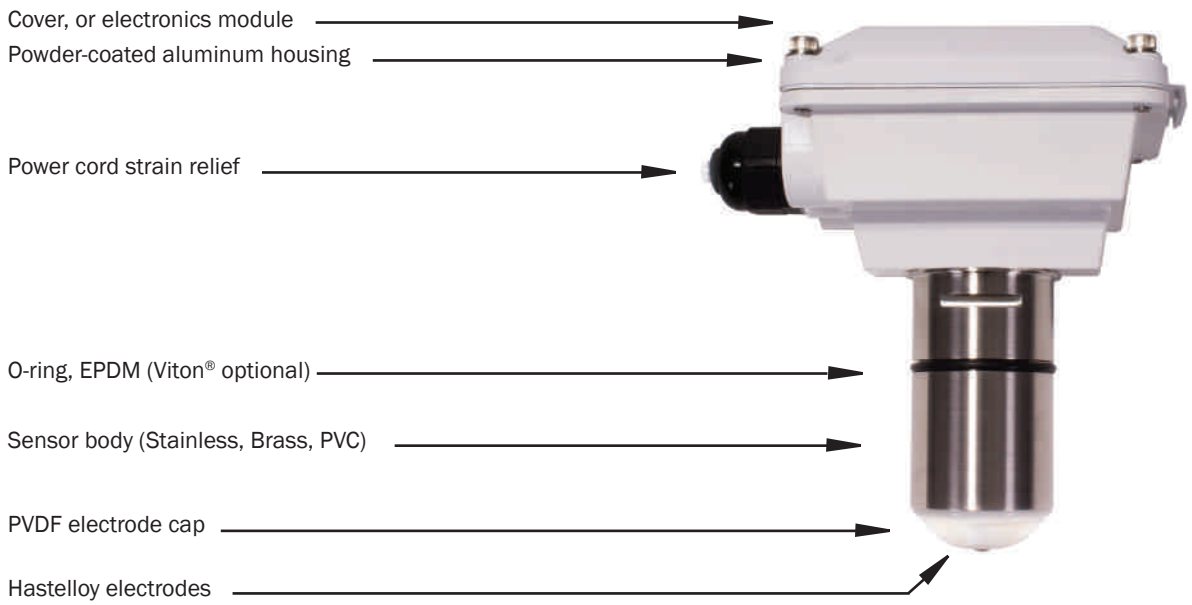

SPECIFICATIONS*

Pipe Size		1” to 12”
Materials	**Mechanical**	316 SS/Brass/PVC
	Electrodes	Hastelloy
	Housing	Cast powder-coated aluminum
	Electrode Cap	PVDF (Kynar®)
	O-Ring	EPDM standard (Viton® optional)
Power	**Full Power**	12 - 25 Vdc, 250 mA
	Low Power	12 - 25 Vdc, 40 mA average with 250 mA peaks
Flow Rate		0.28 - 20 ft/sec (0.08 - 6.09 m/sec)
Temperature	**Ambient Temp**	0˚ to 160˚ F (-17˚ to 72˚ C)
	Fluid Temp : Brass/SS	32˚ to 200˚ F (0˚ to 93˚ C)
	Fluid Temp: PVC	32˚ to 130˚ F (0˚ to 55˚ C) @ 0 psi
Pressure	**Brass/SS**	200 psi (14 bar)
	PVC	150 psi (10 bar) @ 75˚ F (24˚ C)
Minimum Conductivity		20 microSiemens/cm
Calibration Accuracy		+/- 1% of full scale
Output		Square wave pulse, opto isolated, 500 Hz @ 20 ft/sec
Empty Pipe Detection		Software, defaults to zero flow
Regulatory		CE (Standard power only)

**Specifications subject to change*

Kynar is a registered trademark of Arkema, Inc., Viton is a registered trademark of DuPont Corporation.

EX800-SERIES
Insertion Electromagnetic Flow Sensor

DIMENSIONS

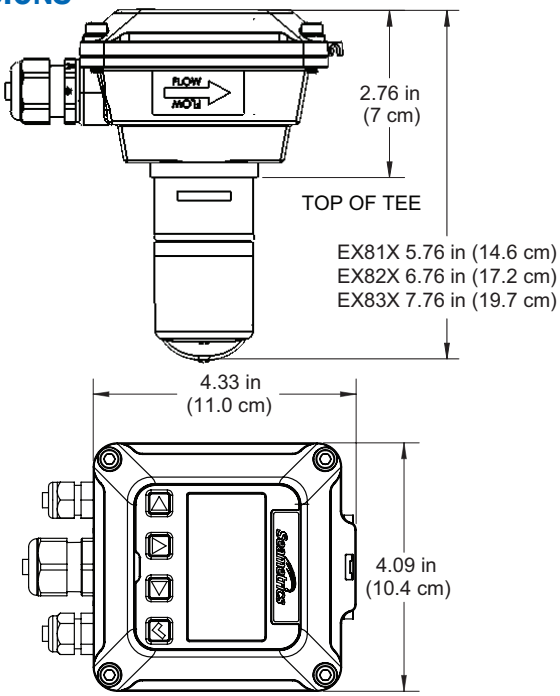

PRESSURE VS. TEMPERATURE (PVC)

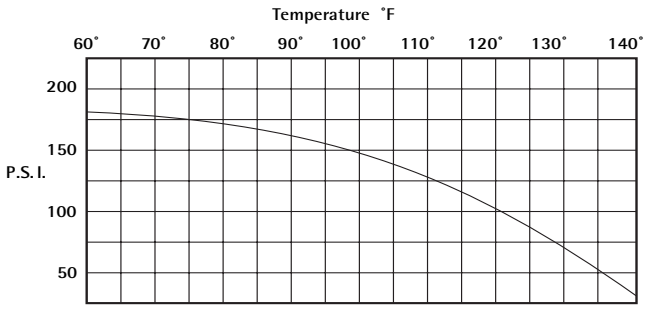

FLOW RANGE

Nominal Pipe Size	1”	1½”	2”	3”	4”	6”	8”	10”	12”
Min GPM Min LPM	.69 2.61	1.5 5.68	2.7 10.22	6.2 23.47	11 41.64	25 94.64	43 162.77	68 257.41	99 374.76
Max GPM Max LPM	49 185.49	110 416.40	196 741.94	440 1665.58	783 2963.98	1760 6662.33	3130 11848.34	4900 18548.52	7050 26687.15

EX800-COMPATIBLE FITTINGS

	Tee	Saddle	Weld/Braze	Sweat Tee
Bronze	1-4"	3-4"	3-12"	1-4"
PVC	1-2"	3-8"	x	x
Stainless Steel	1-2"	x	3-12"	x
Carbon Steel	1-2"	x	3-12"	x
Ductile Iron	x	3-12"	x	x

PVC BLOCK TEE FITTING

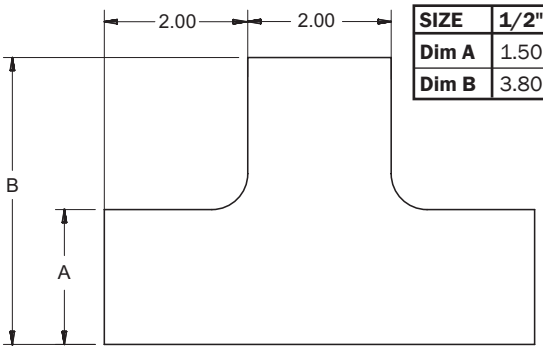

SIZE	1/2"	3/4"	1"
Dim A	1.50	1.90	1.88
Dim B	3.80	4.00	4.00

PVC TEE FITTINGS

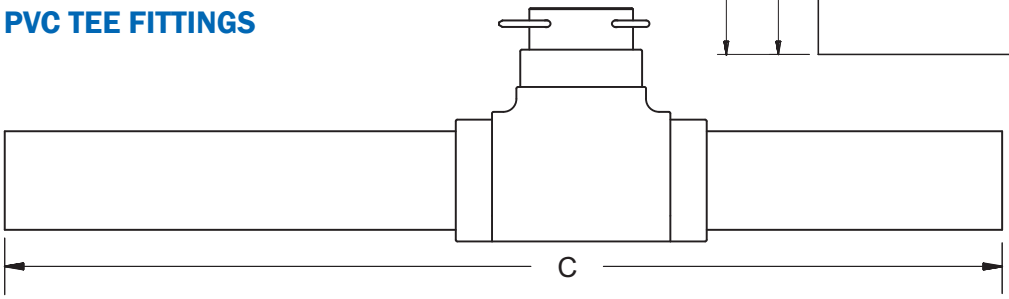

SIZE	1-1/2"	2"
Dim C	19.2	19.9

HOW TO ORDER

	Description	Size	Sensor Material	Options
Sensor Only	**Sensor Only.**	1" - 3" = **EX810** 4" - 10" = **EX820** 12" = **EX830**	Brass = **B** 316 Stainless Steel = **S** PVC = **P**	Reverse Flow Output = **-15** *Immersible = **-40** Low Power Option = **-50** Viton® O-Ring = **-125**

	Description	Size	Sensor Material	Options
A055 Mounted on Sensor	**Blind 4-20 mA analog transmitter (A055) mounted on the sensor.**	1" - 3" = **EX812** 4" - 10" = **EX822** 12" = **EX832**	Brass = **B** 316 Stainless Steel = **S** PVC = **P**	Reverse Flow Output = **-15** Low Power Option = **-50** Viton® O-Ring = **-125**

	Description	Size	Sensor Material	Options
FT430 Mounted on Sensor	**Rate & total indicator with pulse, externally powered (FT430) mounted on the sensor.**	1" - 3" = **EX813** 4" - 10" = **EX823** 12" = **EX833**	Brass = **B** 316 Stainless Steel = **S** PVC = **P**	Reverse Flow Output = **-15** Tamper Evident Kit = **-32** Low Power Option = **-50** Non-resettable Total = **-64** Viton® O-Ring = **-125** Hinged Display Cover= **-126**

	Description	Size	Sensor Material	Options
DL76 Mounted on Sensor	**Data logger (DL76) mounted on the sensor.**	1" - 3" = **EX816** 4" - 10" = **EX826** 12" = **EX836**	Brass = **B** 316 Stainless Steel = **S** PVC = **P**	Reverse Flow Output = **-15** Tamper Evident Kit = **-32** Low Power Option = **-50** Viton® O-Ring = **-125**

	Description	Size	Sensor Material	Options
PD10 Mounted on Sensor	**Pulse Divider (PD10) mounted on the sensor.**	1" - 3" = **EX818** 4" - 10" = **EX828** 12" = **EX838**	Brass = **B** 316 Stainless Steel = **S** PVC = **P**	LMI Pump Connector = **-06** Reverse Flow Output = **-15** 10 Ft. Cable for LMI Connector = **-37** Low Power Option = **-50** Roytronic® Series-A Pump / 5-pin Connector = **-106** Viton® O-Ring = **-125**

	Description	Size	Sensor Material	Options
FT440 Mounted on Sensor	**Rate & total indicator with pulse & 4-20 mA output, loop powered (FT440) mounted on the sensor.**	1" - 3" = **EX819** 4" - 10" = **EX829** 12" = **EX839**	Brass = **B** 316 Stainless Steel = **S** PVC = **P**	Reverse Flow Output = **-15** Tamper Evident Kit = **-32** Low Power Option = **-50** Non-resettable Total = **-64** Viton® O-Ring = **-125** Hinged Display Cover= **-126**

** Immersible to maximum of 3 ft (1m), up to 2 weeks*

Roytronic is a registered trademark of Milton Roy Company. Viton is a registered trademark of DuPont Corporation.