Operation Manual for the Karman Vortex System Flow-Rate Sensor

JKSL-80L

JKSL-160L

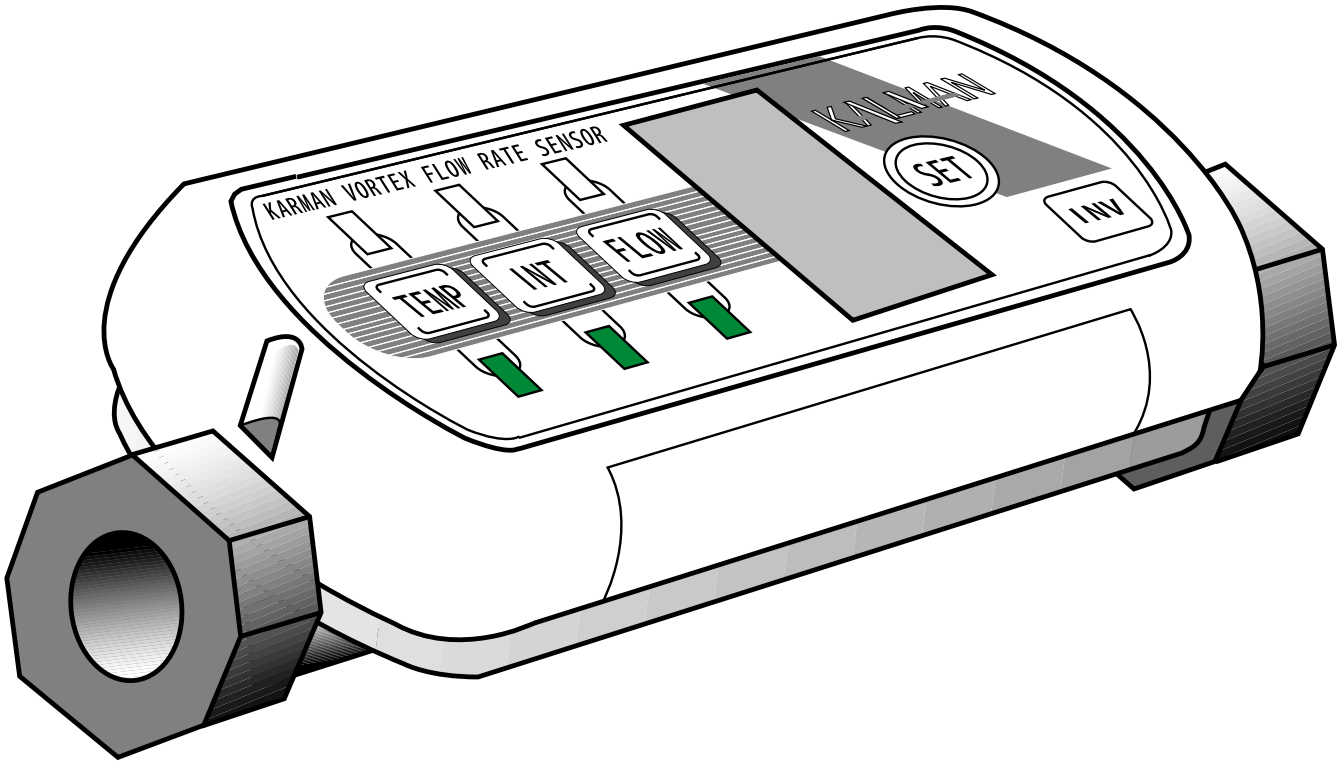

久德電子 **TEL:**+886-4-23729418 **FAX:**+886-4-23724011 (40349)台中市西區福人街11號 www.jetec.com.tw

Safety Precautions

The markings used in this operation manual and their meanings are as follows

WARNIN	This indicates that misuse of the unit could have grave consequences such as death, serious injury, or the like.
CAUTIO	This indicates that misuse of the unit could lead to physical injury or material damage to houses, household effects, and the like.
	This symbol indicates a prohibited action
	This symbol indicates a compulsory action, in accordance with the instructions provided.

★ No part of this manual may be transcribed, in whole or in part, without the written consent of us.
★ The contents of this manual are subject to change without prior notice.
★ Though the utmost care has been taken in the preparation of this manual, errors or omissions may have been overlooked. Please contact us if you have any questions or find any irregularities.
★ Any manual with missing pages or incorrect collating will be replaced. Please contact your dealer.

WARNIN

If an abnormal situation or malfunction occurs, cut off the power supply!

Continued use of the unit in an abnormal or malfunction situation, such as one in which smoke or an unpleasant odor is emitted or unstable operation occurs, could result in a fire or other accident. In such a situation, cut off the power supply immediately and contact your dealer. Under no circumstances should the user attempt to repair the unit.

Handle the power cable with care

To avoid malfunctions and accidents, do not place heavy objects on the power cable, keep it away from heat sources, and do not tug on the cable from the sensor unit

Do not remove the display cover.

The display cover contains an electronic printed circuit board. Touching the board could result in an accident or malfunction. Entrust your dealer with the inspection, adjustment, and repair of the unit

CAUTION

When unpacking or carrying the unit:

When unpacking or carrying the unit, be very careful not to allow it to fall. If the sensor unit falls to the floor, an accident or malfunction may result.

Note the following precautions regarding the location of the unit:

If the unit is used in a location with high humidity or heavy condensation, moisture may form within it, which could lead to an accident or malfunction.

If used in a location where it will be exposed to magnetism, electromagnetic rays, X-rays, or ultraviolet rays, the unit may suffer an accident or malfunction.

If the unit is used in a location subject to high temperatures, such as near a heater, the internal temperature of the unit may become too high, resulting in an accident or malfunction. Use the unit under the specified operating conditions.

If used in a location susceptible to heavy vibration, the unit may operate improperly or suffer an accident or malfunction.

Do not insert fingers into the unit:

Exercise care, as injury may result if fingers are inserted into the sensor units, such as during piping work.

When servicing the unit:

To ensure safety, cut off the power supply first. Failure to observe this precaution could result in an accident or malfunction.

Features

1. The digitized setting and adjustment allow set values to be saved in memory, and also ensure stable operation after power is supplied to the unit again.
2. The LED display can be turned upside down using a single button, thus avoiding the inverted indication of numeric values after the piping work.
3. Highly durable and maintenance-free. The lack of moving parts eliminates the problem of the generation of dust, enabling the fluid to be kept clean.
4. While the unit can indicate flow rates, integrated values, and temperatures on the LED, it is also delivering the outputs at all times.
5. As the primary output consists of a frequency output that is proportional to the flow rate, an integrated flow-rate value can be obtained directly.
6. The adoption of an 8-bit microcomputer has enabled high-speed processing

Principle of operation

Figure 1 below shows a schematic diagram of the principle of operation. Let the frequency of the vortex discharged on the downstream side of the pole (Karman Vortex) be represented by f, and the dimensionless number (referred to as the "Strouhal number") by St.
Then, we obtain the following equation:

$$f = St \frac{V}{d}$$

St is a function of the Reynolds number and remains nearly constant within a certain range. Therefore, f is proportional to V. When the flow rate is represented by Q and the sectional area of the flow passage by A, the equation Q = AV holds true. Therefore, V can be found by determining frequency f, and flow rate Q can be measured through conversion.
Based on this principle, the flow sensor detects the frequency of the Karman vortex generated from the pole by means of the beat plate, and subjects it microcomputer processing.

<Figure 1> Diagram of the Principle of Generation of the Karman Vortex

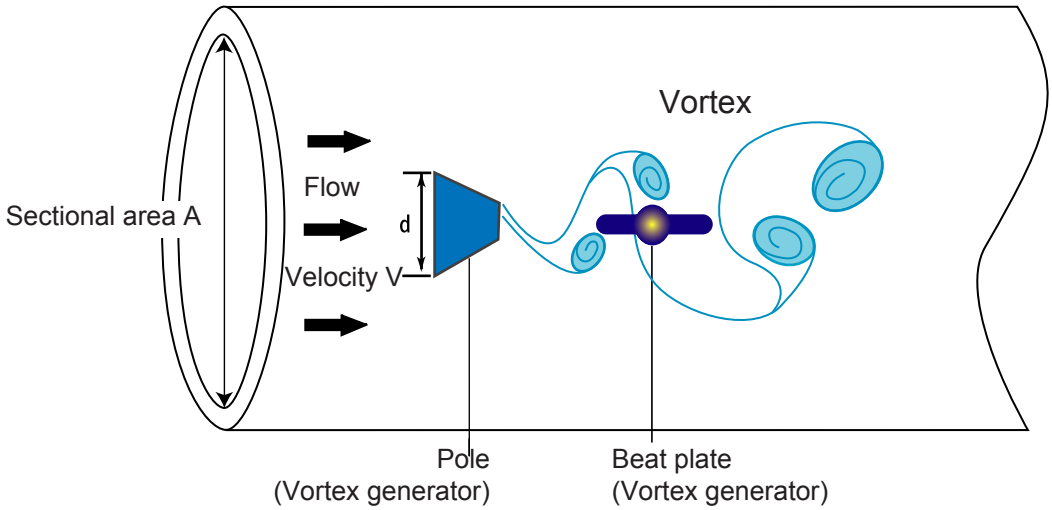

久德電子 TEL:+886-4-23729418 FAX:+886-4-23724011 (40349)台中市西區福人街11號 www.jetec.com.tw

Configuration

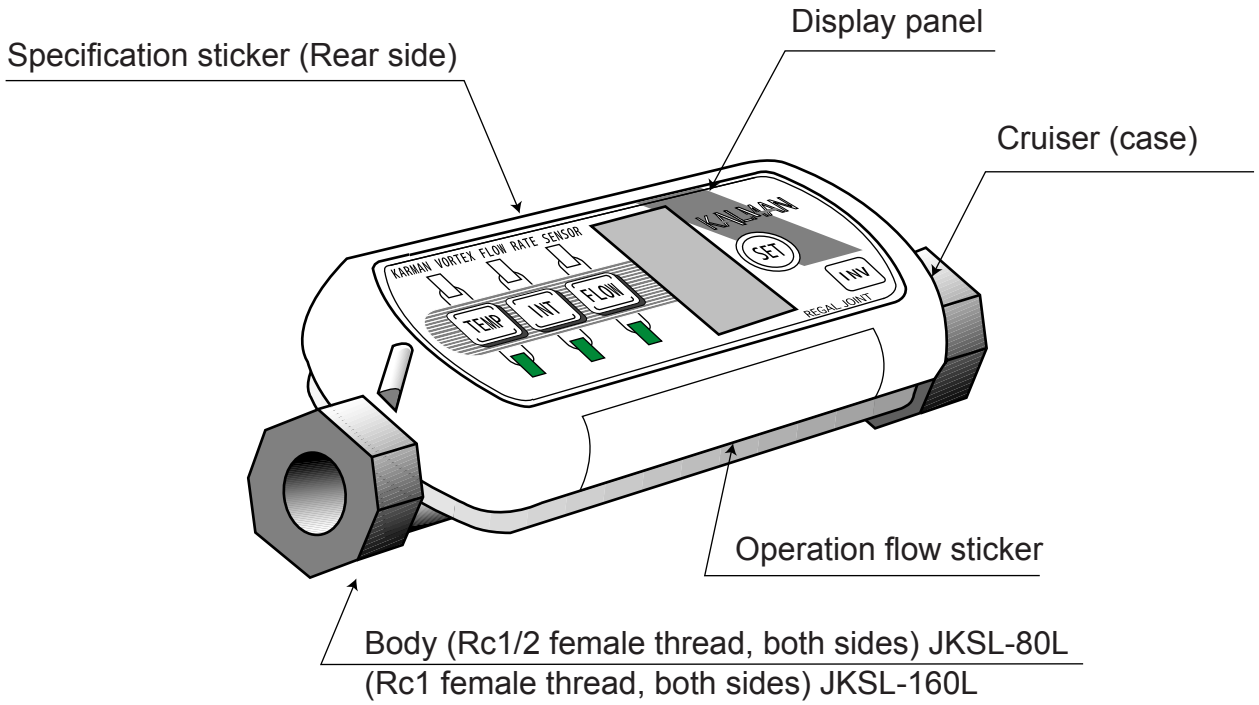

Cabling method

○ AWM20276: This is a 9 core/0.16 mm2 1000 mm cable with no terminal processing.
○ GND should be used as a common ground wire for all other signaling lines, except for the alarm lines.

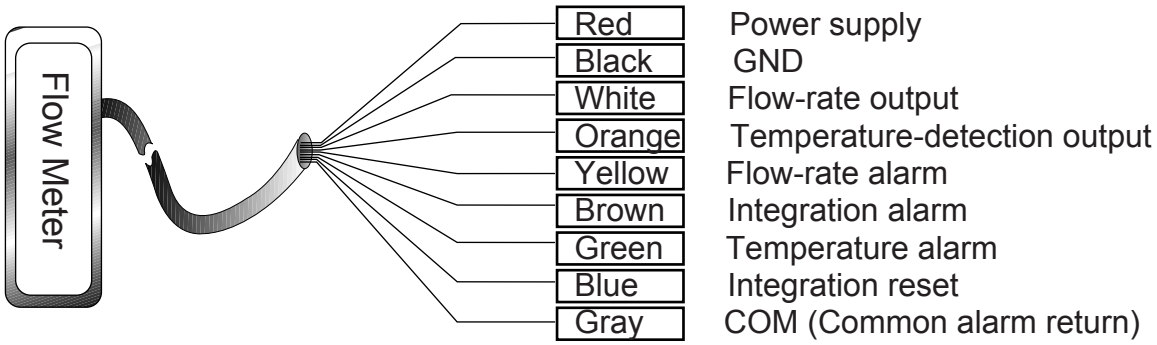

久德電子 TEL:+886-4-23729418 FAX:+886-4-23724011 (40349)台中市西區福人街11號 www.jetec.com.tw

Dimensional diagrams (mm)

The dimensions specified below are for the JKSL-80L; those of the JKSL-160L are indicated in ( ).

<Plan View>

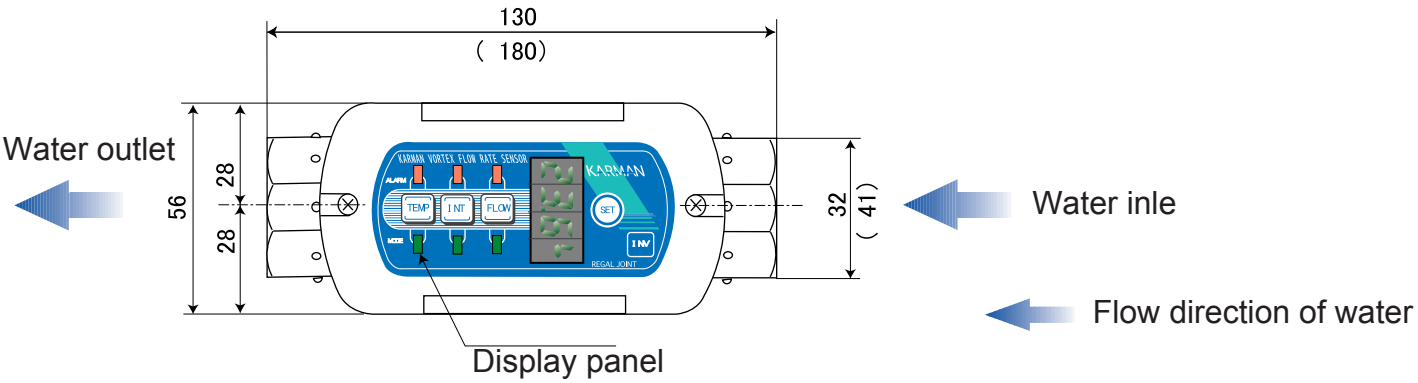

<Side View>

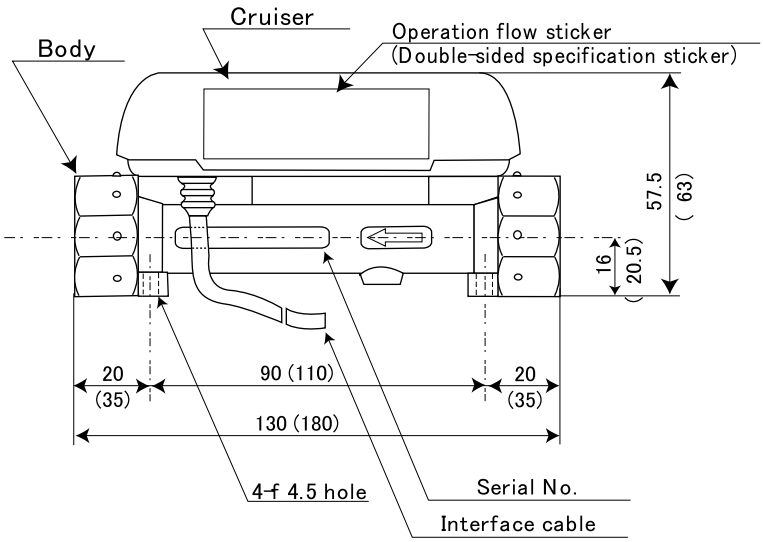

<Front View>

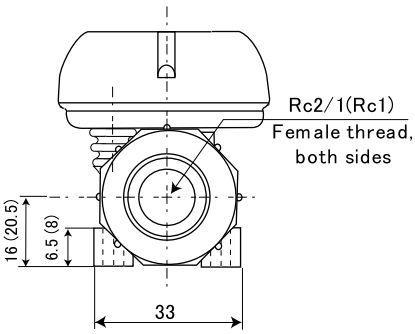

Locations of machined mounting holes

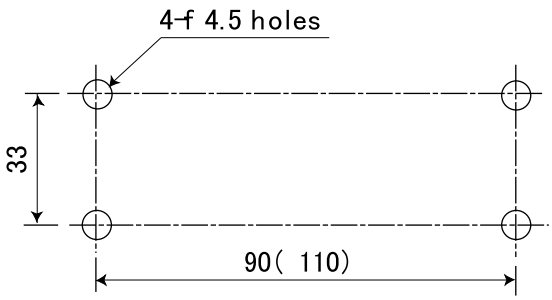

The Karman Vortex System Flow-Rate Sensor is directly screwed into the piping.
Use the 4-f 4.5 holes located on the bottom surface to fasten the unit, as necessary.

Operating method

The illustration below represents the display panel at the upper part of the unit.

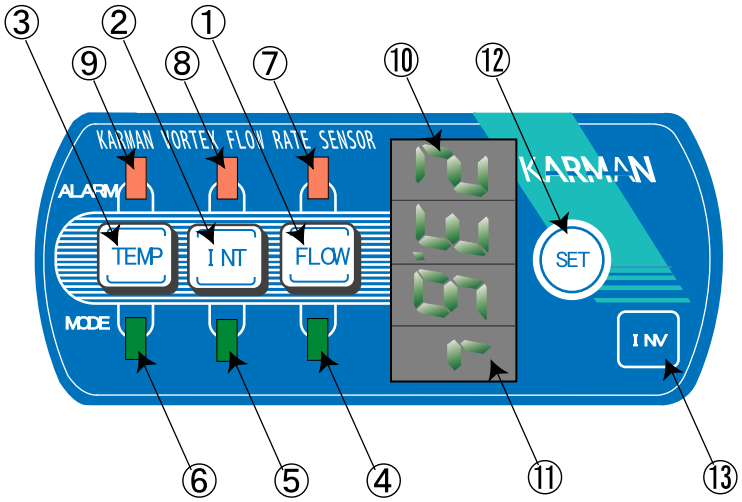

Outline of operation

When the unit is supplied with power, it indicates a flow rate by default; specifically, it indicates a flow rate unconditionally (The unit has no power switch.)

[***Mode-change flow***]

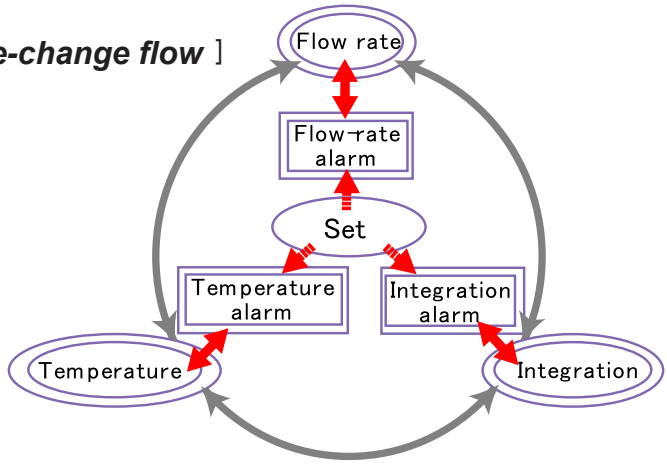

The sensor unit can measure the flow rate, integration, and temperature as the corresponding switches are operated. The measurement results are output through the interface cables and are displayed at the same time on the 3-digit LED (green). The unit shifts from any status to the mode corresponding to the switch depressed [①, ②, or ③].

Priority is given to the three modes: flow-rate indication, integration indication, and temperature indication

If flow-rate indication mode is selecte

Pressing the Flow Rate switch (①) causes the LED display to flash and allows the flow-rate alarm to be set. Pressing the Set switch (⑫) sets an alarm value. Each time the Set switch is pressed, the value is increased; pressing the Set switch (⑫) while holding down the Flow Rate switch (①) reduces the value. Press the Flow Rate switch (①) again after deciding on the desired value; the flow-rate indication will be restored, indicating that the setting has been confirmed.
Follow a similar procedure for the integration and temperature.

1. Setup of the flow rat

Supply DC power to the unit after connecting the interface cables (the JKSL has no power switch, and connection of 24 V DC or 12 V DC starts up the unit); the unit will start operating.

The moment the unit is supplied with power, it enters the flow-rate mode (by default), and (④) lights up. If there is a flow (1 l/min. or larger), the light flashes. Two seconds later, (⑩) and (⑪) start up, indicating the fluid.

L denotes l/min., and the above illustration shows a flow rate of 23.6 l/min. The overrange is 90 l (in the case of JKSL-80L) or 180 l (in the case of JKSL-160L), with F being displayed in such a case.

Then, press ①; ⑩ will start flashing, indicating that the alarm setup has been enabled. Pressing ⑫raises the threshold in increments. Press ① once again when the target threshold value is reached. The threshold will be established, and the flow-rate indication will be displayed. Pressing ① while holding ⑫down lowers the threshold in decrements.

If the actual flow rate exceeds the threshold, ⑦ goes out and an alarm signal to the cable is turned on. (The unit can also be shipped out with inverse polarities.)

2. Integration mode

Although the unit enters the flow-rate mode the moment it is supplied with power, pressing ②thereafter activates the integration mode. As ①, ②, and ③ are priority switches, pressing any of them shifts the unit to the corresponding mode. ⑤ comes on, and ⑩and ⑪ indicate an integrated value.

⑩alternately displays the mantissa section (3 digits) and exponential section (1 digit/0 to 3) of an integrated value (4 sec vs. 2 sec/in unit of •)

Example 1: When 256 L is indicated
256 (The mantissa section is 256
-E0 (The exponential section is 0.)

Example 2: When 365 × 10^2 L is indicated:
365 (The mantissa section is 365.)
-E2 (The exponential section is 2

In the case of Example 2, pressing ② allows the lower 2 digits to be viewe

Example 3: 48 - (⑫) pressed)
- : Space

Example 3 shows that the measured value is 36548 L

Pressing ②again allows an integration alarm to be set. The unit alternately indicates the mantissa section (3 digits) and exponential section (1 digit, 0 to 3) by flashing (12 sec vs. 4 sec/•).

Example 4: When 2780 L is indicated:
278 (The mantissa section is 256.
-E1 (The exponential section is 1.

Example 4 shows that the threshold is 2780 L.

Pressing ⑫raises the threshold in increments. Pressing ②again when the target value is reached establishes the threshold, and the integration indication is displayed. Pressing ⑫while holding ② down lowers the threshold in decrements. If the integrated value exceeds the threshold, ⑧goes out and an alarm signal to the cable is turned on. (The unit can also be shipped out with inverse polarities.) The threshold has no hysteresis. The maximum value is 999.999 l, and it is reset to 0 when exceeded. The integrated value can be reset by the following two methods:
- Press ⑫while holding ②down in the integration mode.
- Momentarily connect RESET of the cable to the ground.

3. Temperature mode

Pressing ③shifts the unit to the temperature mode. As ①, ②, and ③are priority switches, they shift the unit to the corresponding mode from any mode. Specifically, pressing ③ activates the temperature mode unconditionally.

Pressing ③causes ⑩to flash and indicate a temperature alarm value. Pressing⑫raises the threshold in increments, and pressing ③sets it, displaying the temperature indication at the same time.

The threshold can be set in a range from 0 to 99°C, but has no hysteresis. If the water temperature exceeds the threshold, ⑨lights up. (The unit can also be shipped out with inverse polarities.

◎ ***Over-range indication 99 (Over 99°C)***
0 (below 0°C)

* The lighting and extinction of the alarms (④ to ⑨) can be defined at the factory prior to shipment, as mentioned above

MOS-FET
When comes [ON]: Actual value 3 target value: Green light on/red light off
When goes [OFF]: Actual value < target value: Green light off/red light on

4. Inversion of display

In any mode, the unit inverts ⑩and ⑪when ⑬ is pressed. This feature makes it easy to view the display, according to the orientation in which the unit is mounted.

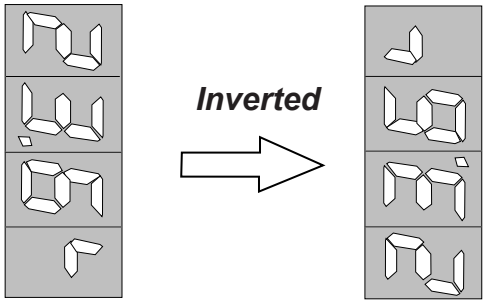

The illustration below represents a sticker placed on the side of the unit that explains how to set an alarm.

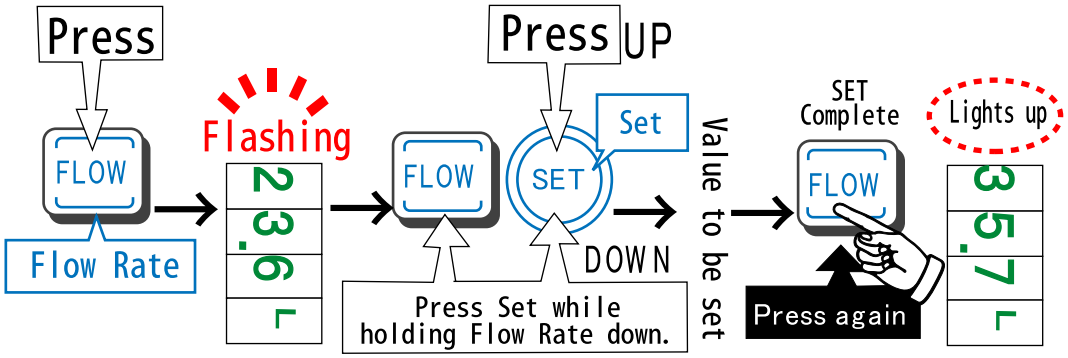

Circuit configuration

For data (flow rate/integration/temperature) indications, the signals transmitted from PT and PZT are processed by the microcomputer; LED1 shows the measurement data; LED5, 6, and 7 indicate the mode; and LED2, 3, and 4 produce the alarm indications. The mode switchover is performed using SW1, SW2, or SW3 for the flow rate, integration, or temperature, respectively, and LED1 displays the alarm value. Its setup is performed via SW4, and the display inversion is performed using SW5.
The alarm signals consist of open-collector outputs, which are delivered to the cables (FALM, SALM, TALM)

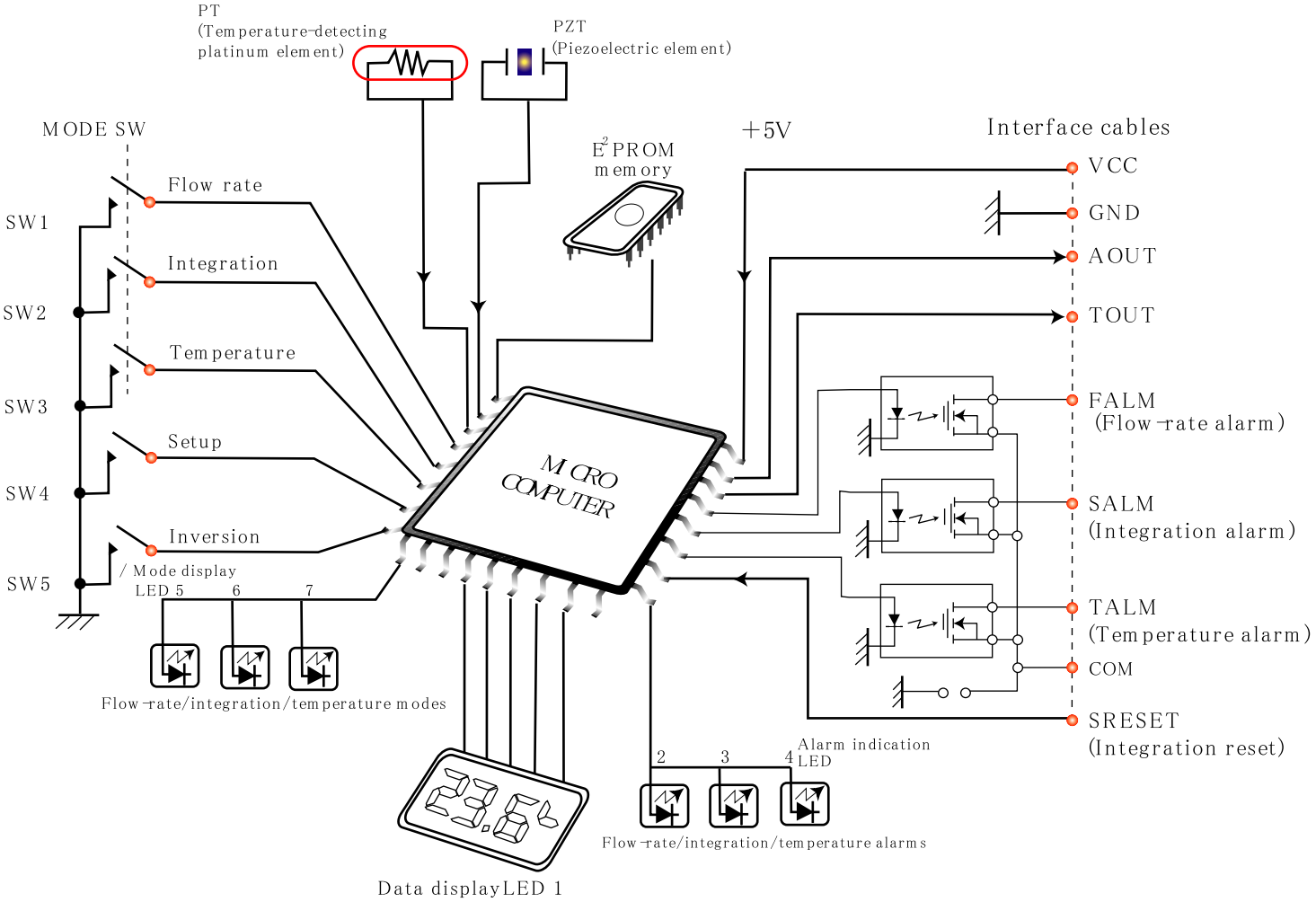

The Karman vortex is detected by the PZT (piezoelectric element), and the signal is processed by the microcomputer to be finally output at the specified level (0 to 10 V, 4 to 20 mA, or pulse output) through the interface cables. The unit also performs the integration of flow rates during signal processing.

The water temperature is detected by the PT (temperature-detecting platinum element). After the signal is processed by the microcomputer, its level is raised to the specified value, simultaneously with the flow-rate output, and then output at TOUT. <Table 1> explains the specifications to be decided on at the factory prior to shipment. The supply voltage, specified levels of the cables, alarm polarities, and integrated values of the maximum flow rates are fixed at the factory prior to shipment.

<Table 1>

Item	Symbol	Type	Remarks
Supply voltage	VCC	24V	Choice of two
		12V	
Flow-rate output	AOUT	0~10V	Choice of three
		4~20mA	
		Pulse output	
Temperature output	TOUT	0~10V	Choice of two
		4~20mA	
Alarm output	TALM	ON output	Choice of two
		OFF output	
Max. flow rate	-	MAX 80L	Choice of two
		MAX 160L	

Interfaces

The table below shows the input and output interface lines available to the user.
* The choice in Output Selection is set to one of the characteristics at the factory

Symbol	Color	Designation	Direction	Characteristic	Output Selection	Usage
VCC	Red	Power Supply	JKSL←Equipment	DC24V±10%	Choice of two	DC power is supplied from the equipment. The current flows to the unit the moment it is connected, as the KSL has no power switch.
				DC12V±5%		
GND	Black	Ground	JKSL←Equipment			Common ground line. This single line serves as a common return for all other lines, including power supply.
AOUT	White	Flow-rate output	JKSL←Equipment	0~10V	Choice of three	The flow rate is converted into an electric signal, which is sent to the equipment side
				4~20mA		
				Pluse output		
TOUT	Orange	Temperature detection output	JKSL←Equipment	0~10V	Choice of two	The water temperature is converted into an electric signal, which is sent to the equipment side.
				4~20mA		
RALM	Yellow	Flow-rate alarm	JKSL←Equipment	MOS-FET(ON)	Choice of two	The flow-rate alarm is reported to the equipment side. (A): ON when flow rate > threshold (B): ON when flow rate < threshold
				MOS-FET(OFF)		
SALM	Brown	Integration alarm	JKSL←Equipment	MOS-FET(ON)	Choice of two	When the integrated value exceeds the threshold, it is reported to the equipment side. (ON): ON when integrated value > threshold (OFF): ON when integrated value < threshol
				MOS-FET(OFF)		
TALM	Green	Temperature alarm	JKSL←Equipment	MOS-FET(ON)	Choice of two	When the temperature exceeds the threshold, it is reported to the equipment side. (ON): ON when temperature > threshold (OFF): ON when temperature < threshold
				MOS-FET(OFF)		
SRESET	Blue	Integration reset	JKSL←Equipment			The integrated value is reset from the equipment side (the count restarts from 0).
COM	Gray	Alarm common	JKSL⇄Equipment			Common return circuit of FALM, → TALM, and SAL

Connecting the load

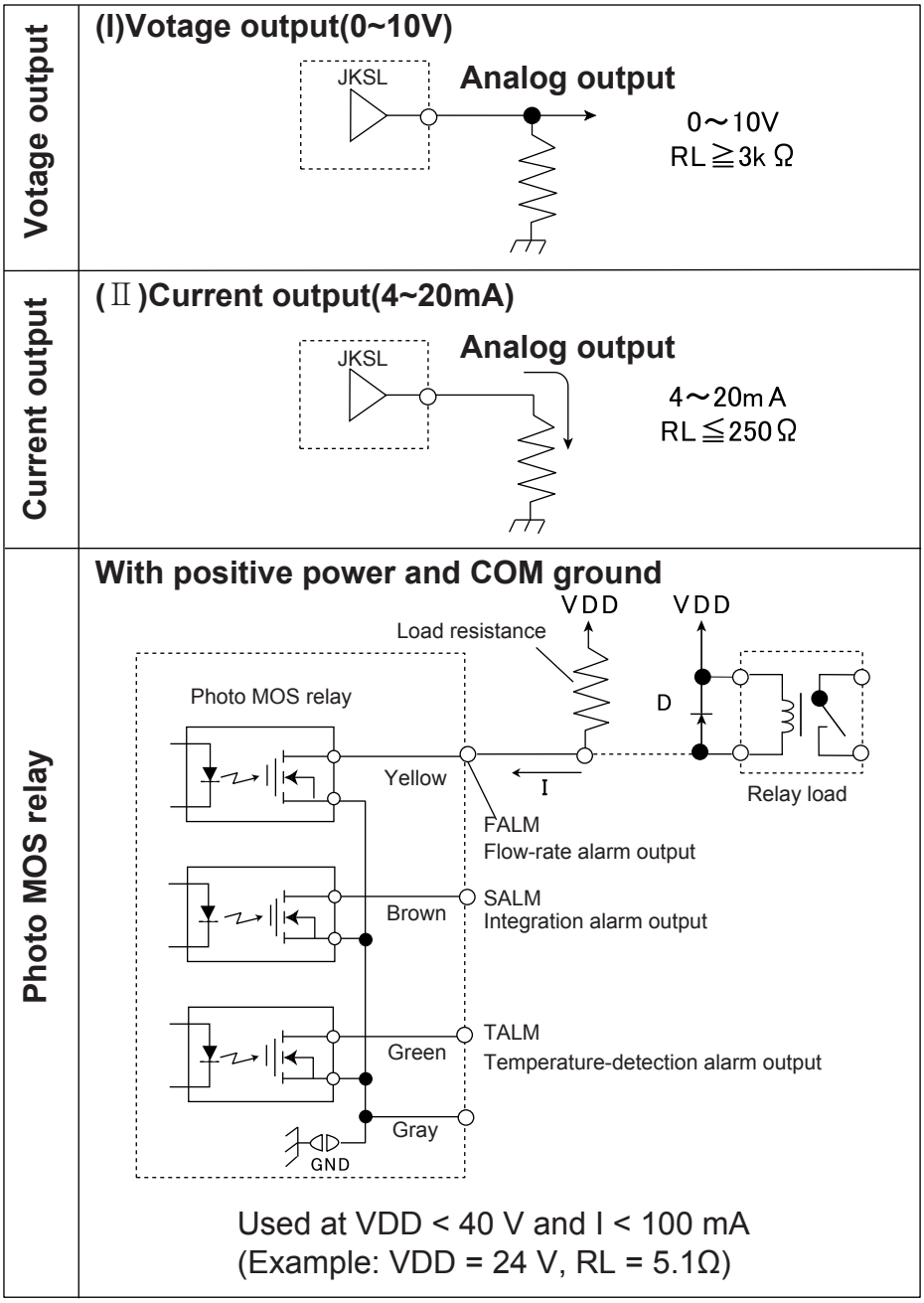

1. When operating the unit under a relay load, use a diode (D) to prevent breakdown of the transistor due to a counter-electromotive force. (Example: V03C (Hitachi))
2. The unit is shipped out with the COM terminal open or grounded (depending on the model and order). On a product with the COM terminal grounded, there is continuity between COM and the black cable.
3. When COM is open:

FALM
SALM — ***COM***
TALM ***(Side B)***
(Side A)

Sides A and B can be connected with either polarity, positive or negative, if the voltage is within 40V.

Input and output signal

[Voltage output]

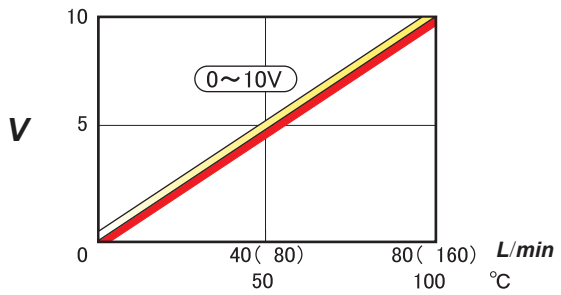

[Current output]

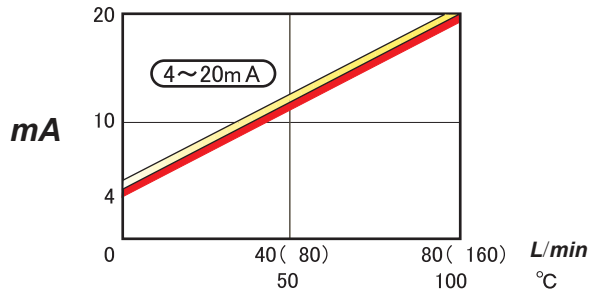

Flow rate
Temperature

[Integration reset input]

(JKSL-side input resistance: 50 kW)

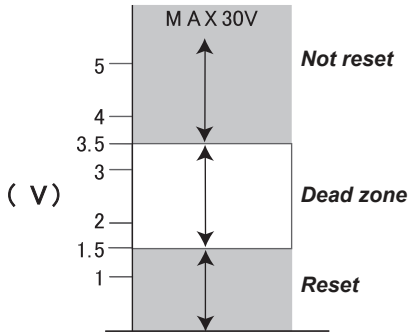

[Pulse output]

(Open-collector output)

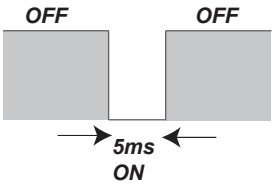

The open collector comes on every 0.1 L

Flow-rate characteristics

The flow-rate characteristics are temperature-dependent, as can be gathered from the figure below. To maintain accuracy, secure a straight-pipe length of 7D or more on the upstream side, and 5D or more on the downstream side. Moreover, be sure to install valves, branchings, gauges, etc. on the downstream side.

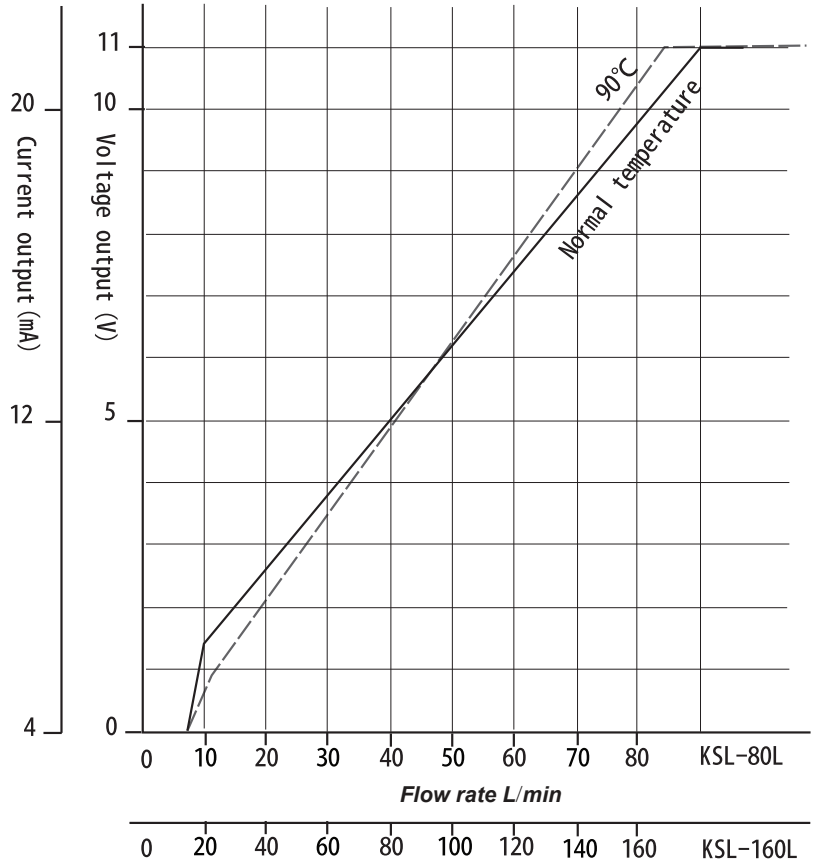

D: Diameter.
For 80L, D = 13.5 mm;
for 160L, D = 19.0 mm.

The characteristic graph below is given only for reference purposes

久德電子 TEL:+886-4-23729418 FAX:+886-4-23724011 (40349)台中市西區福人街11號 www.jetec.com.tw

Caution

1. Content set forth in this operation manual may be altered without a prior notice because of improving or enhancing specification of the flow sensor.
   When applying the flow sensor , make sure to use the updated edition of the operation manual.

2. An outline of the movement and specification of the flow sensor is to be explained in this operation manual as conforming to its standards. When applying it, care must be taken to use the sensor appropriately with a proper instrumental design only after due consideration against external conditions.

3. As to Application Condition :
   Be sure thet the flow sensor must be applied within the condition of maximum applicable pressure, fluid temperature and / or environmental temperature as specified in the terms of " Using Condition " in this operation manual.

4. As to Electric Wiring :
   Never fail to strictly observe the content set forth in each item of " Erectrical Charateristics" such as loading condition of relay output , tolerance of power supply voltage and so forth. Care must be taken not to cause an anti-polarity contact of the power supply and short-circuit of the output.

5. We are not responsible for any or all failure and/ or accident resulting from misuse or unsuitable usage of the flow sensor. Strictly observe every instruction item set forth in this operation manual.

6. It is not allowed to reprint and/ or reproduce a part or all of the operation manual without a prior permission by us.