# Conductive Leakage detectors of the LeakConductive range

## with electrode and relay

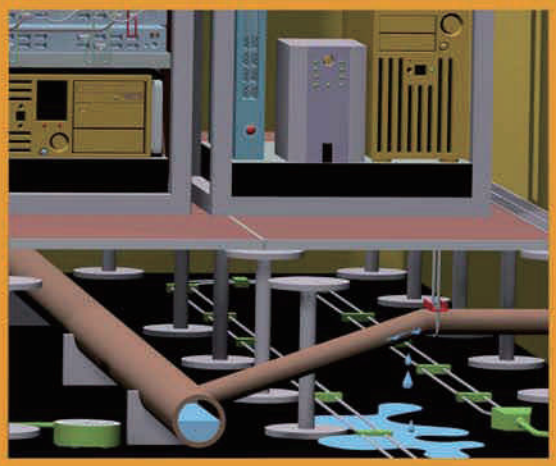

# DPE... and DWDX...
# conductive plate electrodes

**Conductive plate electrodes are designed to signal via a connected conductive electrode relay the presence of an electrically conductive liquid caused, for example, by burst pipes.**

**Conductive plate electrodes should only be used in normally dry environments. They must be installed on the floor in such a way that the sensor side faces downwards.**

**The conductive plate electrodes are fitted with two sensitive elements in the form of two electrode plates: 1 control electrode and 1 ground electrode. If the two electrode plates come into contact with an electrically conductive liquid (e.g. water, acid etc.), an electrical contact is made and an alarm signal given.**


**DPE-Z10**


**DPE**


**DWDX-4**


**DPEK-4**


**DPEK-2/2**

**DWDX... sensor side**

**DPE...**
**sensor side**


**DPEK-Z10**


**DWDX-Z10**

# The conductive measuring principle

The conductive measuring principle is used for the detection of **electrically conductive liquids**.

**It is not suitable for the detection of electrically non-conductive liquids (e.g. oils, diesel, fuel oil, demineralised water ...).**

Electrically conductive liquids are generally aqueous solutions of salts, acids or alkalis. The molecules of these substances dissociate in water into positive and negative ions which give the aqueous solution its electrical conductivity.

The conductive leakage detector of the LeakConductive range consists of the combination of a conductive electrode and a conductive electrode relay. This combination detects the presence of an electrically conductive liquid at the electrodes, and an alarm signal is then emitted.

The measurement process uses alternating current to ensure exact response sensitivity and to prevent galvanic processes at the electrodes.

## Leakage detection with conductive “LeakConductive” point sensors

| | | | |
|---|---|---|---|
| Conductive plate electrodes | DPEK | 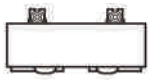 | 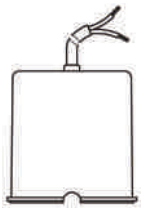 |
| | DPE | | |
| | DPEK-2/2 | | |
| | DPEK-4 | | |
| | DPE-Z10 | | |
| | DPEK-Z10 | | |
| | DWDX | | |
| | DWDX-4 | | |
| | DWDX-Z10 | | |

**Explanation of the colours used:**

= **without** cable break monitoring

= **with** cable break monitoring

= with relay: **without** cable break monitoring or

= with electrode + relay: **with** cable break monitoring

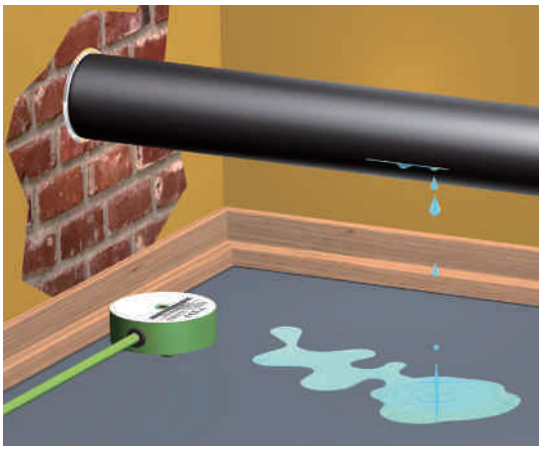

**Use of a plate electrode for leakage detection of an electrically conductive liquid under a pipe**

# Leakage detection with conductive “LeakConductive” point sensors

## Application examples with conductive plate electrodes

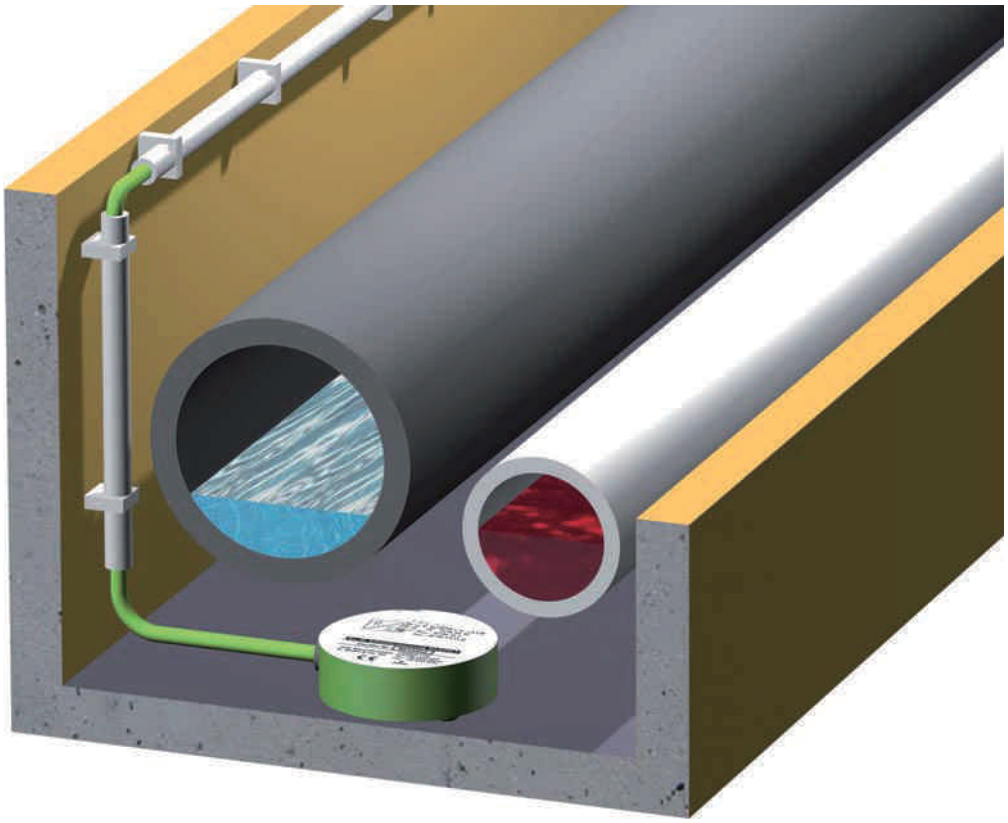

Use of a plate electrode for leakage detection of an electrically conductive liquid in a pipe duct

Use of a plate electrode for leakage detection of an electrically conductive liquid at the lowest point (groove in the picture) of a collection room

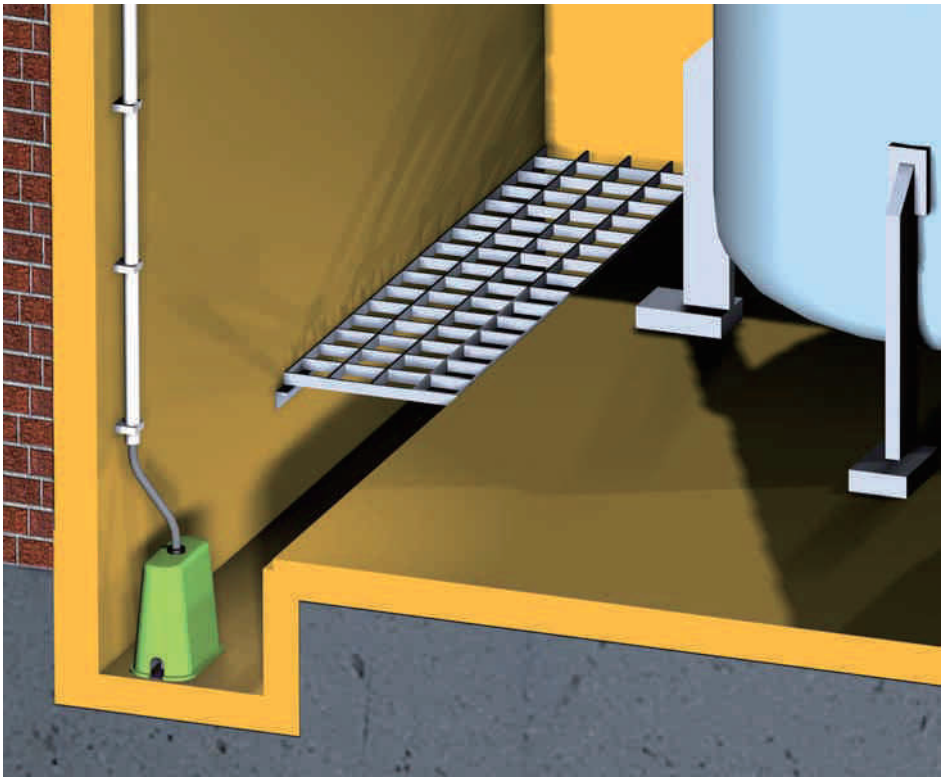

# DPE... conductive plate electrodes

| Technical data | DPEK | DPE | DPEK-2/2 | DPEK-4 | DPE-Z10 | DPEK-Z10 |
|---|---|---|---|---|---|---|
| Design | 1 control electrode and 1 ground electrode | | | | | |
| Sensitive elements | 2 electrode plates made of stainless steel 316 Ti, each 24 mm in dia. | | | | | |
| Housing | PP and cast resin | | | | | |
| Electrical connection | connecting cable* 2X0.75 | screw-type / crimp connection | connecting cable* 2 x 2X0.75 | connecting cable* 4X0.75 | screw-type / crimp connection | connecting cable* 2X0.75 |
| | * length 2 m, on request:<br>• longer<br>• halogen-free | | | | | |
| Temperature range | – 20°C to + 60°C, higher temperatures on request | | | | | |
| Cable break monitoring | **without** | **without** | **without** | **without** | **with** | **with** |
| | integrated Z10 cable break monitoring unit | | | | | |
| Classification | connection to one of the following conductive electrode relays | | | | | |
| • **with** cable break monitoring unit, **with** DIBt certificate No. Z-65.40-203 | | | | | **LeakConductive 101** or **LeakConductive 101/S:** one DPE-Z10 or one DPEK-Z10 | |
| | | One or several DPE, DPEK-2/2 and/or DPEK-4 may be connected in parallel between a DPE-Z10 or DPEK-Z10 and one of these relays. | | | | |
| • **with** cable break monitoring unit, **without** DIBt certificate | | | | | **LeakConductive 171/1** or **LeakConductive 171/2:** one DPE-Z10 or one DPEK-Z10 **LeakConductive 155:** max. five DPE-Z10 or DPEK-Z10 | |
| | | One or several DPE, DPEK-2/2 and/or DPEK-4 may be connected in parallel between a DPE-Z10 or DPEK-Z10 and one of these relays. | | | | |
| • **without** cable break monitoring unit, **without** DIBt certificate | **LeakConductive 5** or **LeckConductive 5/G:** any number of DPEK, DPE, DPEK-2/2 and DPEK-4 may be connected in parallel to either one of these relays. | | | | | |
| Max. length of connecting cable | 1,000 m between electrode relay and last electrode | | | | | |

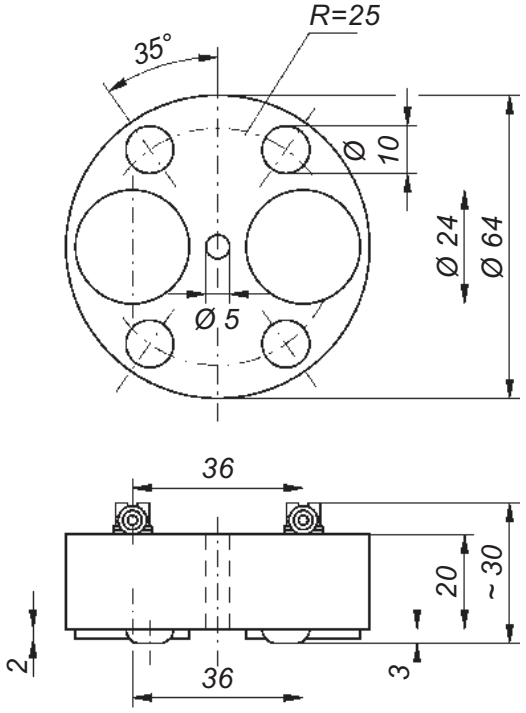


**DPE(-Z10)**

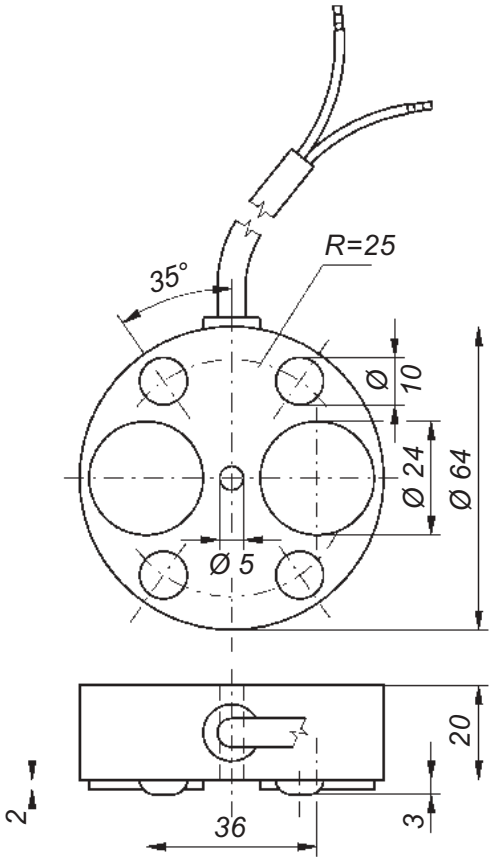


**DPEK(-Z10)**

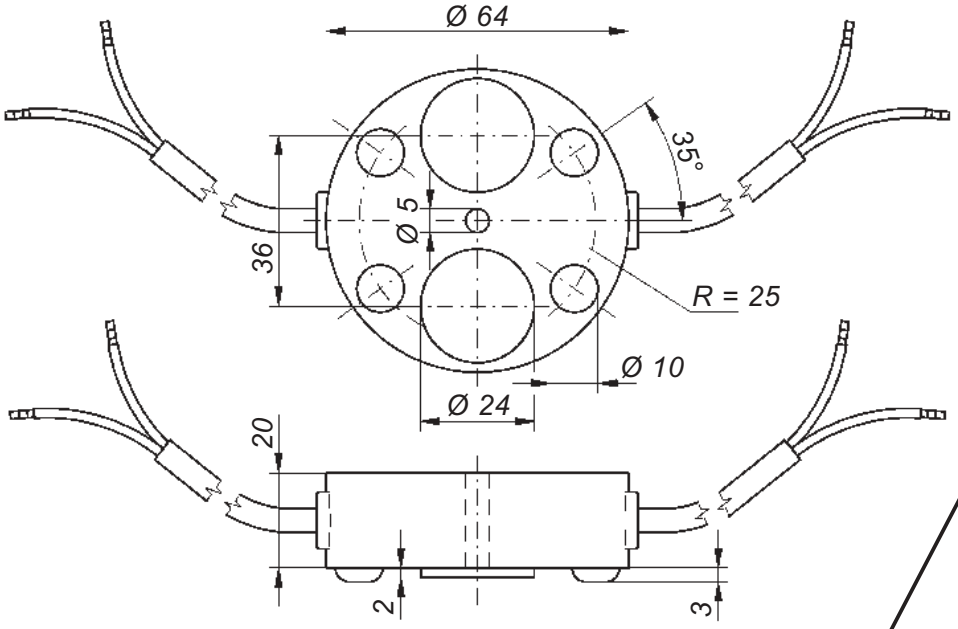


**DPEK-2/2**

**DPEK-4**

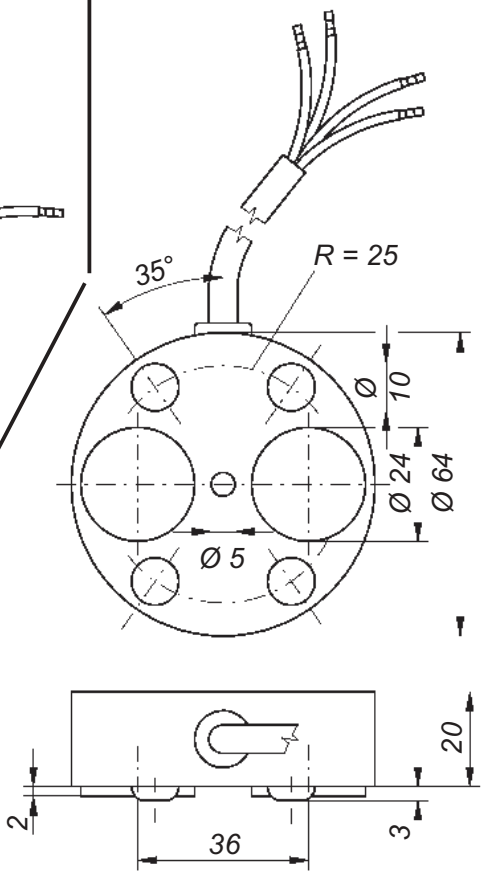


*Dimensions in mm*

# DWDX... conductive plate electrodes

| Technical data | DWDX | DWDX-4 | DWDX-Z10 |
|---|---|---|---|
| Design | 1 control electrode and 1 ground electrode | | |
| Sensitive elements | 2 electrode plates made of stainless st. 316 Ti, each 25 mm in dia. | | |
| Housing | PP and cast resin | | |
| Electrical connection | 2X0.75 | connecting cable 4X0.75 length 2 m, on request: • longer • halogen-free | 2X0.75 |
| Temperature range | – 20°C to + 60°C, higher temperatures on request | | |
| Cable break monitoring | **without** | **without** | **with** integrated Z10 cable break monitoring unit |
| Classification | connection to one of the following conductive electrode relays | | |
| • **with** cable break monitoring unit, **with** DIBt certificate No. Z-65.40-203 | | **LeakConductive 101** or **LeakConductive 101/S:** one WDX-Z10 | |
| | | One or several DWDX-4 may be connected in parallel between a DWDX-Z10 and one of these relays. | |
| • **with** cable break monitoring unit, **without** DIBt certificate | | **LeakConductive 171/1** or **LeakConductive 171/2:** one DWDX-Z10 | **LeakConductive 155:** max. five WDX-Z10 |
| | | One or several DWDX-4 may be connected in parallel between a DWDX-Z10 and one of these relays. | |
| • **without** cable break monitoring unit, **without** DIBt certificate | **LeakConductive 5** or **LeakConductive 5/G:** any number of DWDX and/or DWDX-4 may be connected in parallel to either one of these relays. | | |
| Max. length of connecting cable | 1,000 m between electrode relay and last electrode | | |
| Mounting accessory | stand (option) | | |

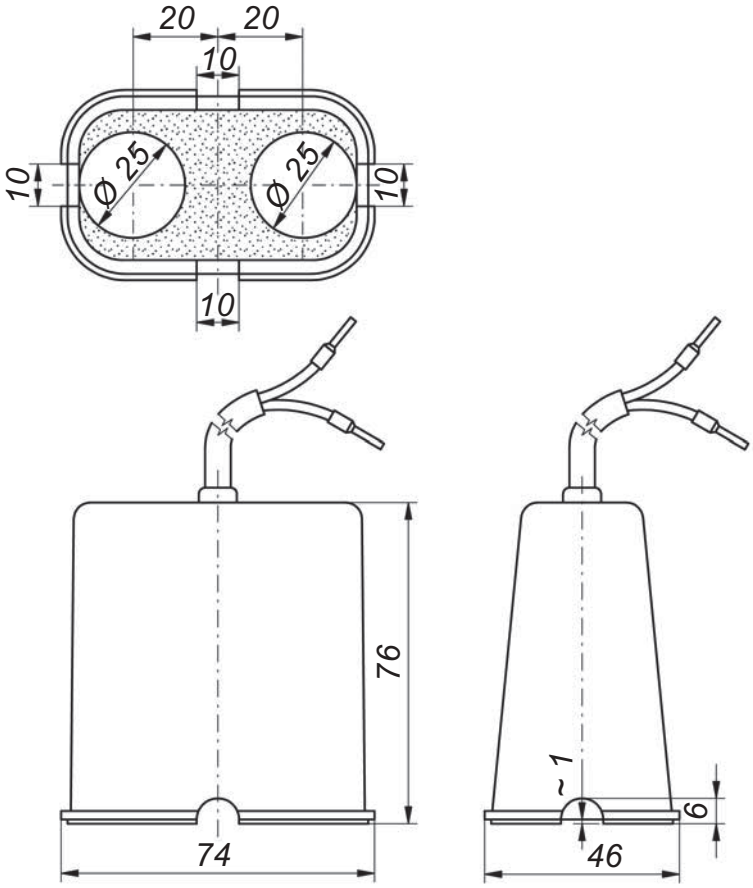


**DWDX-4 version**

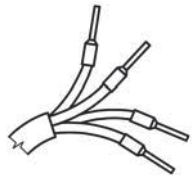

**DWDX(-Z10)**

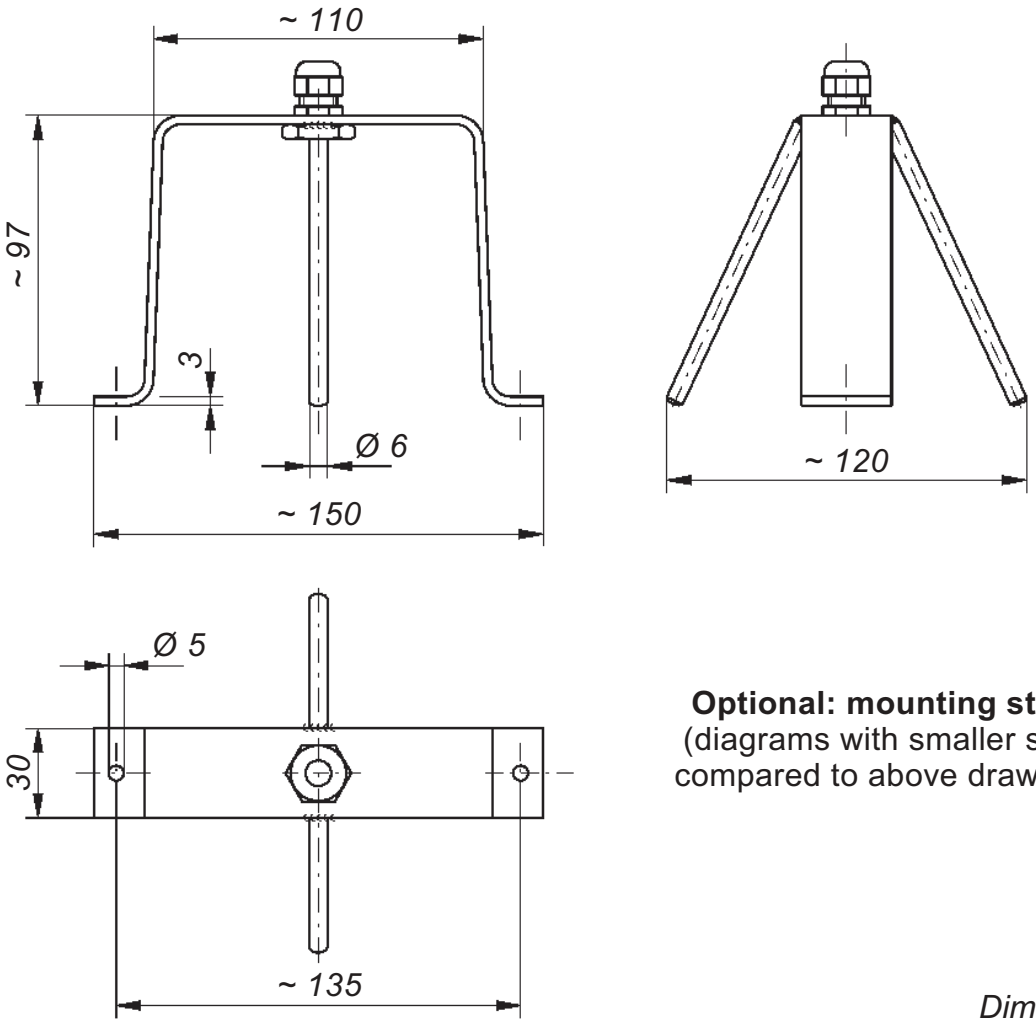


**Optional: mounting stand**
(diagrams with smaller scale compared to above drawings)

*Dimensions in mm*

# Examples of electrically conductive liquids

Accumulator acid, 32 %
Acetic acid, 70 %
Acrylic acid, 70 %
Adipic acid *
Aluminium chloride *
Aluminium potassium sulphate: see alums
Aluminium salts from mineral acids: see alums
Aluminium sulphate *
Alums (Me(I)-Me(III) sulphates) *
Ammonia water (ammonia solution), 25 %
Ammonium acetate *
Ammonium bromide *
Ammonium carbonate *
Ammonium chloride *
Ammonium fluoride *
Ammonium nitrate *
Ammonium phosphate *
Ammonium sulphate *
Ammonium sulphide, 40 %
Ammonium thiosulphate *
Anodic oxidation bath ($HNO_3$-30 %, $H_2SO_4$-10 %)
Anticalcium: see antiliming agent (sulfamic acid)
Antiliming agent (sulfamic acid), 50 g/l of $H_20$
Aqua regia, nitrohydrochloric acid, 1 : 1

Barium carbonate *
Barium chloride *
Barium hydroxide *
Barium nitrate *
Bicarbonate of ammonia *
Borax (sodium tetraborate) *
Borofluoric acid (tetra boro fluoric acid), 35 %
Bromine water *

Cadmium chloride *
Cadmium sulphate *
Calcium acetate *
Calcium bromide *
Calcium chloride *
Calcium fluoride *
Calcium hydroxide *
Calcium hypochlorite *
Calcium sulphate
Caustic potash solution (potassium hydroxide) *
Caustic soda, 32 %
Chlorine water *
Chloroacetic acid, saturated
Chlorsulfon acid, > 97 %
Chromic acid, 5 %
Chromic sulfuric / acid mixture
Citric acid *
Cupric chloride *
Cupric cyanide *
Cupric nitrate *
Cupric sulphate *

Electroplating bath, $AgNO_3$/KCN
Ethylen diamine tetra acetic acid (trilon B)

Ferric (III) chloride *
Ferrous (II) sulfate
Formaldehyde, 40 %
Formic acid, 80 %

Glycol acid, 50 %

Hydrazine hydrate, 80 %
Hydrobromic acid, aqueous solution *
Hydrochloric acid, 37 %
Hydrofluoric acid (fluohydric acid), 40 %
Hydrogen peroxide, 30 %

Javel water / bleaching lye: see sodium hypochloride

Liquid fertilizer application: see manuring salts

Magnesium chloride *
Magnesium hydroxide carbonate (magnesium carbonate) *
Magnesium sulphate *
Manuring salts / saline manure
Mercury nitrate *
Mercury sulphate *

Naphtalene sulphonic acid *
N-butyric acid, 70 %
Nickel chloride *
Nickel nitrate *
Nitrating acid mixture: see aqua regia, nitrohydrochloric acid
Nitric acid (fuming)
Nitric acid (not fuming), approx. 65 %
Nitrolotriacetic acid (Trilon A) *
Nitrosylsulphuric acid, 30 %

Oleum: see sulfuric acid, fuming

Phenidone (1-Phenyl-3-Pyra-zolidinone)
Phosporic acid, concentrated
Photographic developer, pure
Picric acid *
Potassium bicarbonate *
Potassium borate *
Potassium bromade
Potassium bromide *
Potassium carbonate (potash) *
Potassium chlorate *
Potassium chloride *
Potassium cyanide *
Potassium ferrocyanide and potassium ferricyanide *
Potassium iodide *
Potassium nitrate *
Potassium sulphate *
Propionic acid, 80 %

Salicylic acid *
Silver nitrate, 2 % solution
Sodium acetate *
Sodium aluminium sulphate: see alums
Sodium bisulphite *
Sodium bromide *
Sodium carbonate *
Sodium chlorate *
Sodium chloride *
Sodium cyanide *
Sodium dichromate *
Sodium dithionite *
Sodium hydrogen carbonate *
Sodium hydrogen sulphate *
Sodium hypochlorite (up to 30°C; 150 g/l of active chlor)
Sodium nitrate *
Sodium nitrite *
Sodium peroxide *
Sodium phosphate *
Sodium silicate *
Sodium sulfide *
Sodium sulphate *
Sodium sulphite *
Sodium tetraborate: see Borax
Sodium thiosulphate *
Sulfuric acid, 20 %
Sulfuric acid, 96 - 98 % **
Sulfuric acid, fuming (oleum), 65 % $SO_3$ **
Sulfurous acid, 5 - 6 % $SO_2$

Tartaric acid *
Tin(II) chloride *
Trichloracetic acid

Water (tap water)

Zinc chloride *
Zinc nitrate *
Zinc sulphate *

* Saturated solution

** Only suitable for point sensors, because the line and surface sensors have a too long reaction period

A reliable detection of electrically poor conductive liquids (compared to the above-mentioned liquids) can be achieved by adaption of the sensitivity of the conductive electrode relay in our works (on request).